Tactile Switches 6mm × 3.5mm Radial Taped Top Push

■Features

- 6mm × 3.5mm size for high density mounting
- Crisp clicking by tactile feedback
- Prevent flux uprise by insert molded terminal
- Radial taping for auto insertion and dip soldering

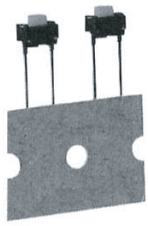

■Dimensions (Unit: mm)

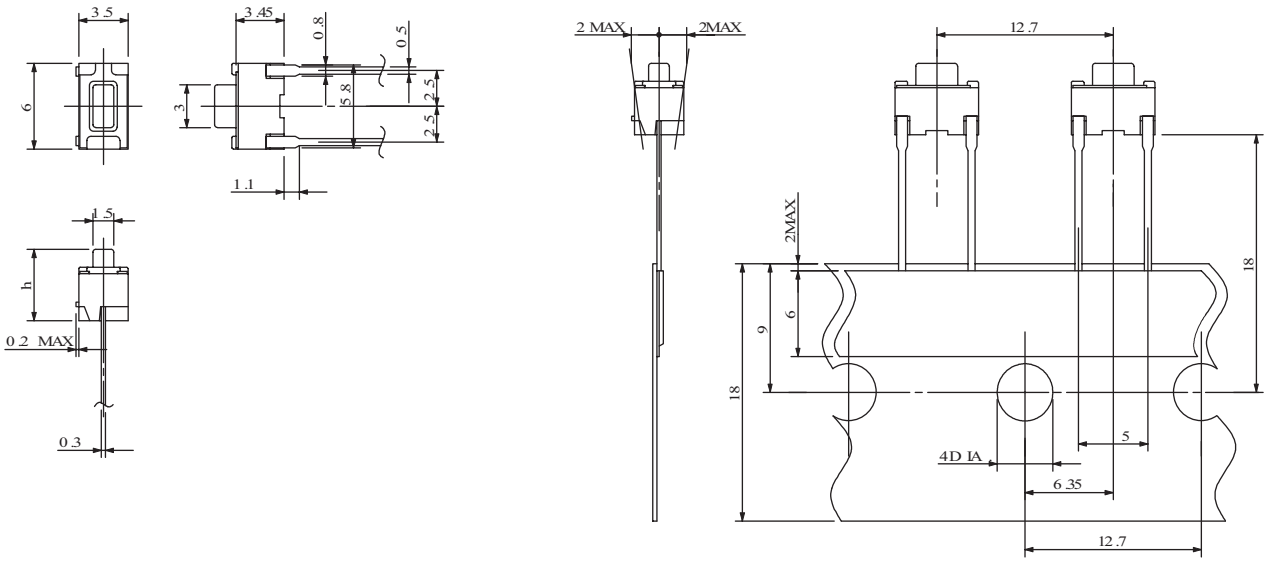

■Specification

Item	Specification	Unit	Note
Operating Temperature Range	-20~+70	℃	
Storage Temperature Range	-40~+85	℃	
Type of Operation	Tactile Feedback		
Contact Configuration	Push-On Momentary, 1 Pole-1 Throw		
Power Rating	Max. 50mA 12VDC		
Contact Resistance	Max. 200	mΩ	
Insulation Resistance	100MΩ Min. at 100VDC		
Dielectric Withstand Voltage	250 VAC for 1 Minute		
Contact Bounce	Max. 10	ms	
Operating Force	0.98±0.49	N	A Type
Operating Force	1.57±0.49	N	B Type
Operating Force	2.55±0.69	N	C Type
Return Force	Min. 0.10	N	A Type
Return Force	Min. 0.30	N	B Type
Return Force	Min. 0.49	N	C Type
Travel	0.25 -0.1/+0.2	mm	

■Model Designation

KSM 03 1 2 A T

- T — Taping
- A — Operating Force
- 2 — Mount Height *1
- 1 — Terminal Option
- 03 — Size
- KSM — Model No.

*1 Mount Height

	h
1	4.3
2	5

Specifications are subject to change without notice.