Tactile Switches 6mm × 6mm Side Push

■Features

- Reliable contact by proprietary contact construction
- Crisp clicking by tactile feedback
- Prevent flux uprise by insert molded terminal
- Ground terminal attached
- Snap-in mount terminal

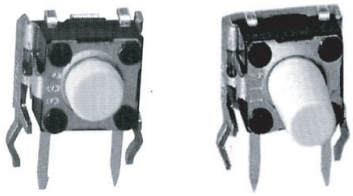

■Dimensions (Unit: mm)

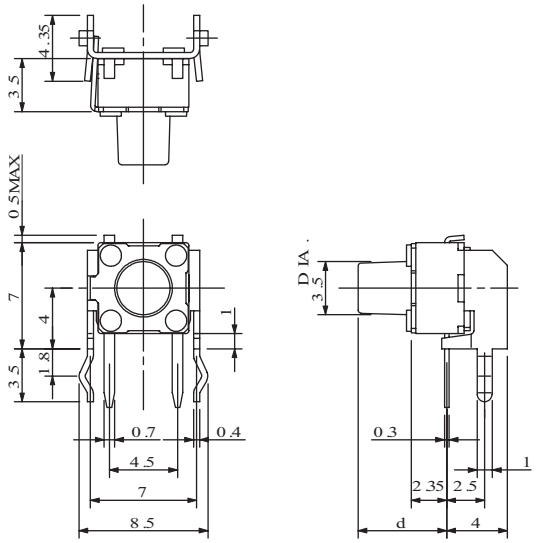

■Specification

Item	Specification	Unit	Note
Operating Temperature Range	-25~+70	℃	
Storage Temperature Range	-40~+85	℃	
Type of Operation	Tactile Feedback		
Contact Configuration	Push-On Momentary, 1 Pole-1 Throw		
Power Rating	Max. 50mA 24VDC		
Contact Resistance	Max. 100	mΩ	
Insulation Resistance	100MΩ Min. at 100VDC		
Dielectric Withstand Voltage	250 VAC for 1 Minute		
Contact Bounce	Max. 5	ms	
Operating Force	0.98±0.49	N	A Type
Operating Force	1.57±0.49	N	B Type
Operating Force	2.55±0.69	N	C Type
Return Force	Min. 0.10	N	A Type
Return Force	Min. 0.49	N	B Type
Return Force	Min. 0.49	N	C Type
Travel	0.25 -0.1/+0.2	mm	

■Model Designation

KSM 06 3 2 A

- A — Operating Force
- 2 — Mount Height
- 3 — Terminal Option
- 06 — Size
- KSM — Model No.

	d
1	3.15
2	3.85
3	5.85
4	8.35

Specifications are subject to change without notice.